IEEE 488/GPIB BUS SWITCHING

4842B

GPIB CONTROLLED GPIB BUS SWITCH AND MULTIPLEXER

DESCRIPTION

ICS's 4842B GPIB Bus Switch is a GPIB controlled GPIB Bus switch that enables several GPIB Controllers to share one or more GPIB device(s) or lets a single GPIB Controller operate multiple Bus systems. The 4842B is basically a GPIB controlled A-B-C switch for the GPIB bus. As a GPIB Multiplexer, the 4842B lets up to three GPIB Bus Controllers share the common bus and all devices attached to it. When used as a GPIB Switch, the 4842B lets a single GPIB Bus Controller control up to 39 devices attached to the three numbered ports.

No System Degradation

The Model 4842B does not degrade the performance of the high speed GPIB bus systems. Maximum signal delays are less than 20 nanoseconds from port-to-port. Data transfer is completely transparent with data transfer rates in excess of 1.5 Mbytes/second. The 4842B is one GPIB Bus load and can drive up to 13 devices on any port.

Applications

A typical use of the 4842B is the sharing of an expensive instrument among two or more GPIB controllers. In one case, a Linux computer with a RTOS operating system used a HP Optical Analyzer to position probes on a fiber-optic switch while a second computer later used the Optical Analyzer to characterize the part under test. In another case, test stands shared calibration instruments to assure measurement accuracy.

Multiplexer Operation

In Multiplex mode, the 4842B connects a controller on any numbered port to the common port so each controller can have its own devices and share common devices. Query and status reporting commands let any Controller determine the 4842B's current switch position. If the 4842B's common port is busy, the 4842B will accept reservations and SRQ the Bus Controller when the common port is available. An Override command gives any Controller instant access to the common port. When done, the common port can be switched back to another Controller. The power-on default port is set when the current configuration is saved. The 4842B's port switching system overcomes the problems associated with trying to pass control of a GPIB bus between multiple GPIB Controllers.

Switch Mode Operation

In the Bus Switch mode, the Bus Controller selects a numbered port without any contention. The 4842B can be set to notify the Bus Controller whenever a device on any port requests service. SRQs from all numbered ports are mapped into bits in the 4842B's Status Byte Register. If the corresponding SRE bit(s) are enabled, the 4842B generates an SRQ on the common port. The Bus Controller may serial poll the 4842B to learn which buses have SRQs and then switch to that bus to service the device requesting service.

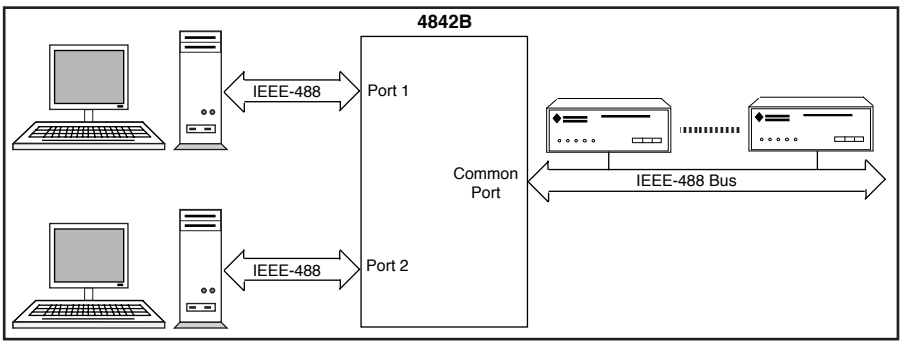

Figure 1 - As a Multiplexer, the 4842B permits up to three IEEE 488 Bus controllers to timeshare a common set of GPIB devices.

- Operates as a 1 to 3 bus switch, permitting a single controller to operate three GPIB Bus systems and up to 39 devices.
  Expands the number of Instruments beyond the IEEE 488 limits.
- Operates as a 3 to 1 multiplexer so up to three bus controllers can share GPIB devices on a Common bus.
  Time-shares expensive equipment.
- High data-transfer rate and minimum signal delays.
  Does not degrade system performance.
- Can be cascaded for large system applications.
  Easy expansion to nine buses
- Multiplexer mode overcomes GPIB Bus pass control problems.
  Straight forward switching eliminates GPIB Driver and Pass Control problems.
- Compatible with ICS's earlier 4842 and 4840 Bus Switches.
  No program changes required
- New 1 'U' high rack wide case mounts in a standard rack.
  Saves space and rack mounting kit cost.

ICS ELECTRONICS
division of Systems West Inc.
7034 Commerce Circle
Pleasanton, CA 94588
Phone: **925.416.1000**
Fax: **925.416.0105**
Web: **www.icselect.com**

IEEE 488 Bus Interface

Each port meets IEEE STD 488.1-1987 and is compatible with all IEEE 488.2 Common Commands. Loading is one GPIB load per numbered port.

Address Range

Self	Primary 0-30
Instruments	Primary 0-30, Secondary 100 to 3030

488.2 Common Commands

*CLS, *ESE, *ESE?, *ESR?, *IDN?, *OPC, *OPC?,*RCL,*RST,*SAV,*SRE,*SRE?,*STB, TST? and *WAI

Power turn-on configuration is set by saving the current configuration in Flash with the *SAV 0 command. The saved configuration is restored at power turn-on.

SCPI Commands

Used to set and query all programmable functions. The 4842B conforms to SCPI 1994.0 Specification.

SCPI Command Tree

ROUTe	
:CLOSe <port>	closes common port to any port
:OVERride	immediate connection
:CLOSe?	queries connections
:OPEN	opens common port
:REServe	reserves connection
SYSTem	
:VERsion?	queries SCPI version
:WAIT <msec>	sets reservation wait time

Signal Pass-thru Specifications

Bidirectional data transfer for all bus signals. SRQs combined to generate an SRQ on the common port

Signal delay	20 ns max.
Handshake rate	>2 Mbyte/s.
Parallel poll delay	40 ns max.

Switch Characteristics

Switch 'on' resistance	<5 ohms
Switch response	<24 ms

4840 Compatible Commands

Cmd	Meaning
C	If idle, connect the addressed port to the common bus port
Cn	If idle, connect the common bus port to the selected bus port *n* (*n*=1 to 3)
D	Disconnect the addressed port from the common bus port (mplx mode only)
R	If busy, add the addressing port to the internal reservation stack
OVR	Immediately connects the addressed port to the common port and disconnects any other port-to-port path
Sn	SRQ Bit Enable Mask enables a Serial Poll response bit n to generate an SRQ interrupt on the common bus, or disables it from doing so. (0 >=n>=255)
@	Requests a program revision message

Front Panel Indicators

PWR	Indicates power on
RDY	Unit has passed self test
TALK	Unit is addressed to talk
LSTN	Unit is addressed to listen
PORT 1	Connected to Common Port
PORT 2	Connected to Common Port
PORT 3	Connected to Common Port
ERR	Unit has detected a command error

Controls

POWER	Front panel switch
RESET	Front panel button
ADDRESS	Rear panel rocker switch
MPXR	Rear panel mode select

Physical

Size 17." L x 5.57" D x 1.52" H
(43.18 cm L x 14.15 cm W x 3.86 cm H)

Weight	4 lbs. (1.8 kg.) plus power adapter
Construction	RoHS Compliant
Temperature	
Operating	-10 °C to +65 °C
Storage	-40 °C to + 70 °C
Humidity	0-90% RH non-condensing
Shock/Vibration	Normal handling
Connectors	
GPIB	GPIB 24 pin ribbon with metric studs.
Power	8 to 32 Vdc @ 6 VA

Included Accessories

Instruction Manual

CD-ROM with GPIBkybd program and Configuration Utility.

UL/CSA/VDE approved AC power Adapter:
100 to 240 Vac, 50/60 Hz
Includes plugs for US, Europe, UK, Japan and Australia/China.

Rack mounting brackets.

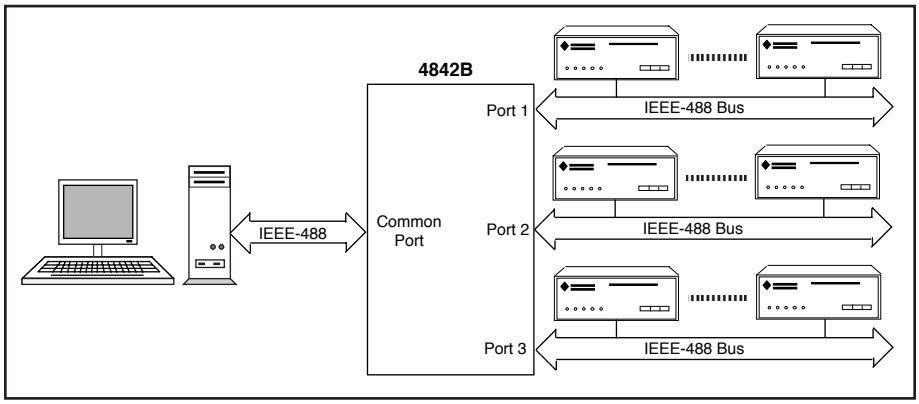

Figure 2 - As a Bus Switch, the 4842B permits a single IEEE 488 Bus controller to operate up to three GPIB buses, expanding the controller's drive capabilities to 39 devices.

ORDERING INFORMATION

	Part Number
IEEE 488 Bus Switch (Common plus ports 1, 2 and 3)	4842B

Specifications subject to change without notice. Copyright 2016 ICS Electronics div Systems West, Inc.