RELAY DRIVER BOARDS

xx03DVR

RELAY DRIVER BOARD FOR ICS's 40 LINE INTERFACE BOARDS

- Provides up to 40 outputs for driving external relays or other heavy loads.
  Eliminates the need for external drivers and logic circuits.
- Configurable as 24, 32 or 40 relay driver outputs.
  Unused driver lines are available as TTL I/O lines to sense inputs, switch closures or to output data.
- Mates with ICS's 2003, 2303, 4803 and 8003 Parallel Interface boards.
  Drive relays and digital signals from the GPIB bus, from a Serial source, via USB or over an Ethernet network.
- Provides 5 volts to power the Interface Board.
  Eliminates the need for a separate 5 volt power supply.
- All I/O lines have screw terminals.
  Easy signal connection.

☑ RoHS Compliant

Description

The xx03DVR Board expands the output drive capability of ICS's 40-line Parallel Interface Boards by adding heavy-duty solenoid drivers to each output signal. The xx03DVR is designed so that the user can use 24, 32 or all 40 digital lines with solenoid drivers to operate relays and other heavy loads. When just 32 or 24 lines are used for relay drivers, the remaining eight or sixteen lines can be used as standard board TTL I/O lines. The xx03DVR Board also converts the relay power supply voltage into 5 Vdc for powering its companion Interface Board, eliminating the need for a separate 5 volt power supply. The xx03DVR board works with ICS Model 2003, 2303, 4803 and 8003 Interface Cards.

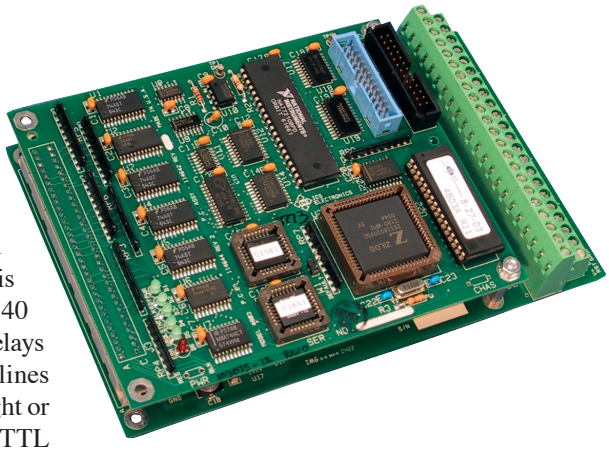

xx03DVR Relay Driver Board with a 4803 Interface Board

High Current Relay Drivers

The xx03DVR Board is equipped with 40 open-collector darlington type drivers that can sink up to 300 mA to operate relays, solenoids or other heavy loads. The rugged relay drivers can handle voltages up to 48 volts. The xx03DVR's driver circuits have been designed to be glitch free so as to not pulse the external relays at power turn-on or turn-off. The output drivers can be operated by bit commands that toggle one bit at a time, by byte-wide commands that control 8 bits at a time or by string commands which can control multiple bytes at a time.

Compact Assembly

The standard xx03DVR Board is designed so that ICS's small Parallel Interface Cards with their digital connector on the circuit side can mount on the xx03DVR board as shown below. ICS Models 2003, 2303, 4803 and 8003 can all be ordered with the digital connector facing down. This makes a compact assembly that is only 4.5 inches wide by 7 inches long by 1.25 inches high as shown in Figure 2.

A version of the xx03DVR Board is available with a female connector on its circuit side so it can sit on top of standard 2003, 2303, 4803 and 8003H boards. Mounting the xx03DVR Board on top of standard boards adds 0.6 inches to the overall assembly height as shown in Figure 3.

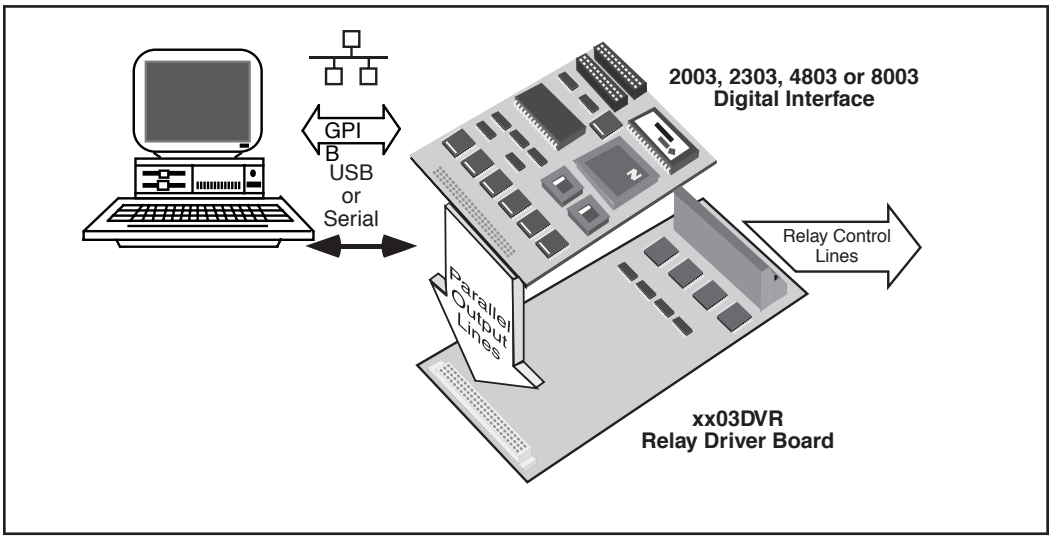

Adding relay drivers to an ICS 2003, 2303, 4803 or 8003 Interface Board

ICS ELECTRONICS
division of Systems West Inc.
7034 Commerce Circle
Pleasanton, CA 94588
Phone: **925.416.1000**
Fax: **925.416.0105**
Web: **www.icselect.com**

Input Lines

The xx03DVR Board can be configured so that all 40 lines are relay driver outputs or the first 8 or 16 digital I/O lines can be connected directly to the Interface board and used as standard TTL I/O lines. Rocker switches and jumpers on the 4803DRV Board bypass the relay drivers on bytes 1 and 2 and connect the terminal strip signals directly to the interface board.

The configuration choices are:

TTL I/O	Relay Driver Outputs
0	40
8	32
16	24

The xx03DVR Board terminal strip connections are identified by bytes and bit, so they easily relate to the signals on the companion Interface Board. Standard bit commands like ROUTe:CLOSe or ROUTe:OPEN can then be used to operate the relay drivers. Output polarity is set high true for the relay driver signals.

An External Reset input can be used to reset the Interface board

Built-in Power Supply

The xx03DVR obtains power from the same power supply that drives the external relays. The relay power is used as the return for the drivers' internal anti-backlash diodes and to power the companion Interface Board. The user should still use relays with built-in anti-backlash diodes to minimize RFI. The xx03DVR contains a small switching regulator that converts 4 VA of relay power into 5 Vdc to power the companion digital board,. This eliminates the need for a separate 5 volt power supply.

xx03DVR Board Assembly

Figure 2 shows how a 2003, 2303, 4803 or 8003 Interface Board with a circuit-side connector mounts on the xx03DVR Board. The board is positioned over J1 on the xx03DVR Board and pressed into place. A pair of 0.688 high female-to-male standoffs holds the front portion of the two boards together. The rear portion is held by the mating force of the two 64 pin DIN connectors. Signal and power wires are attached to the terminal blocks.

Standard Interface Boards with their digital connectors on the component side can be used with the 115522 version xx03DVR Board. The 115522 DVR Board has its digital connector mounted on its circuit side (bottom) of the PC board so it sits on the Interface Board as shown in Figure 3. A pair of 0.688 high standoffs holds the two boards together. Standard 8003s with their vertical RJ-45 connector cannot be used with the 115522 xx03DVR Board because the board blocks the RJ45 connector.

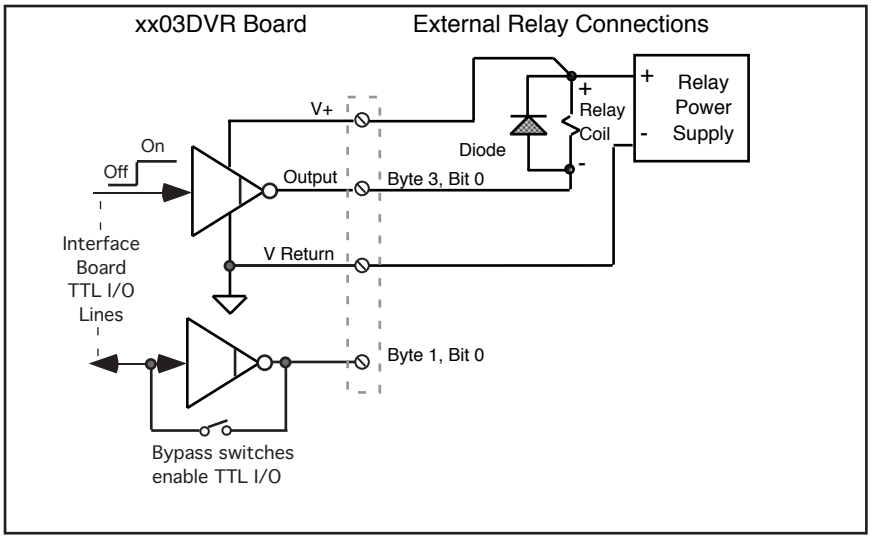

Figure 1 Partial xx03DVR Board Schematic

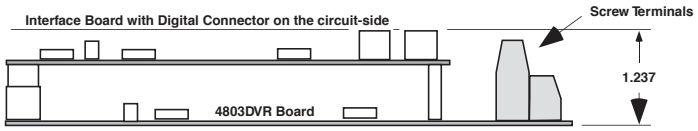

Figure 2 An 4803/2003/2303 or 8003 Board with a circuit-side DIN connector mounts on a xx03DVR Board (P/N 115490)

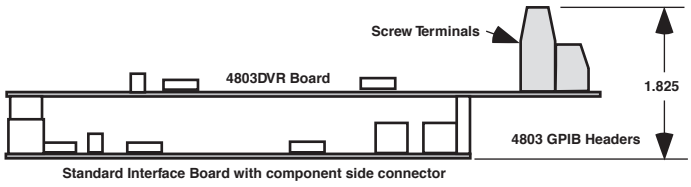

Figure 3 Optional xx03DVR Driver Board (P/N 115522) on top of a 4803/2003/2303 or 8003H Interface Board

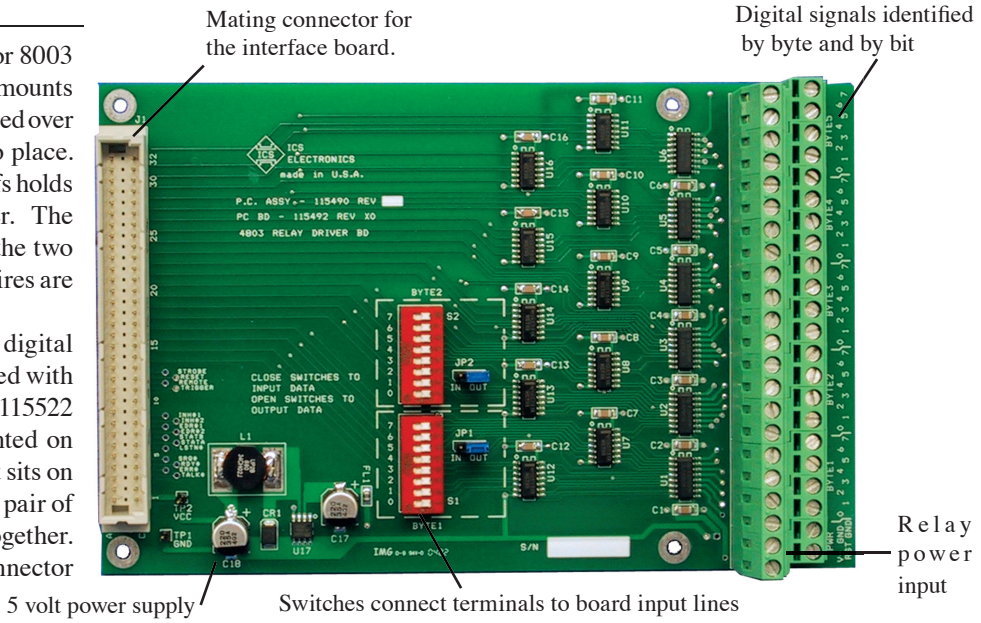

xx03DVR Board Top View (P/N 115490)

Parallel Interface

Standard xx03DVR supplies a male DIN connector for mounting a 2003, 2303, 4803 or 8003 Interface Board with its Digital I/O connector on the circuit side. Power supplied by a switching power supply on the xx03DVR board.

Supplied Power:

Voltage	+5 ± 0.2 Vdc
Current	500 mA max

Companion Interface Boards

The Standard xx03DVR board supports the following ICS small Interface Boards:

Part Number	Model
116038	2003
114732	2303
114648	4803
115848	8003

xx03DVR Connections

The following companion Interface Board lines are used by the xx03DVR Board:

40 Digital I/O lines
Stable Signal
External Reset Input

Other Interface Board Signals

The following companion Interface board signals are brought to pads on the xx03DVR Board and are available to the user:

LED drive signals:
PWR, RDY, TALK, LSTN, SRQ and ERR
EDR and Inhibit pairs #1 and #2
Status A and Status B inputs
Trigger, Remote and Reset outputs
Data Strobe

Driver Characteristics

High power outputs for driving relays or other loads. Relay driver outputs controlled by SOURce or ROUTe commands with polarity set to high true. Number of lines is 40 less the number of lines that by-pass the relay drivers and connect directly to ports 1 and 2 on the digital board.

Number	24, 32 or 40 Lines
Driver Form	Open collector with anti-backlash diode.
Current	up to 300 mA
Vout low	1.3 volts at 300 mA
V max	32 Vdc

TTL Signal Characteristics

TTL signals have the same characteristics as the companion Interface Board's digital signals. Inputs typically have 33 Kohm pullups for sensing CMOS signals and contact closures. Outputs sink up to 48 mA. Signals controllable by Interface Board commands or are monitored by the Questionable Register.

Number	16, 8 or none
As inputs:	
High	> 2.4 Vdc or open
Low	< 0.5 Vdc at 200 μA
Pullup resistor	33 kohms to +5 Vdc

As outputs
High = >3 V with 3 mA source
High =>2 V with 24 mA source
Low = 0.0 to +0.55 Vdc, 48 mA sink

External Reset Input

TTL input signal that resets the Interface Board when pulled to ground. Pullup provided by a resistor on the companion Interface Board.

Physical

Size, L x W x H
177.8 x 114.3 x 14.3 mm
(7.0x 4.5 x 0.562 inches)

Assembled dimensions

115490	177.8 x 114.3 x 32.3 mm 7.0x 4.5 x 1.265 inches)
115522	177.8 x 114.3 x 46.36 mm (7.0x 4.5 x 1.825 inches)

Connectors and Headers

Digital	96-pin, 3 row male DIN connector using rows A & C.
Relays	Screw terminals for #16 - #30 AWG wire.

Temperature

Operation	-10° C to +70° C
Storage	-20° C to +85° C

Humidity
0-90% RH without condensation

Power
+7 to + 32 Vdc @ 4 VA (typical)

Included Accessories

Instruction Manual
2 Standoffs and locknuts

Available Accessories

None

ORDERING INFORMATION

	Part Number
xx03DVR Board for 2003, 2303, 4803 and 8003 boards with circuit-side connectors. Includes Instruction Sheet.	115490
xx03DVR Board for standard 2003, 2303, 4803 and 8003H boards Includes Instruction Sheet.	115522

Copyright 2014 ICS Electronics - Specifications subject to change without notice.